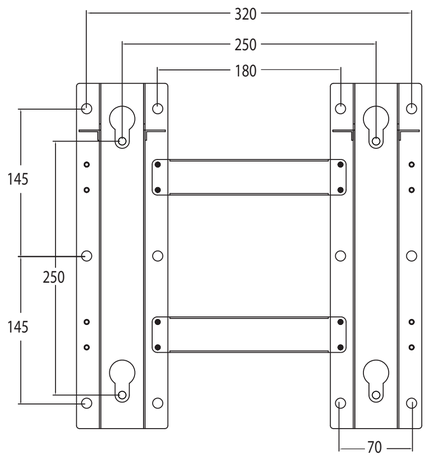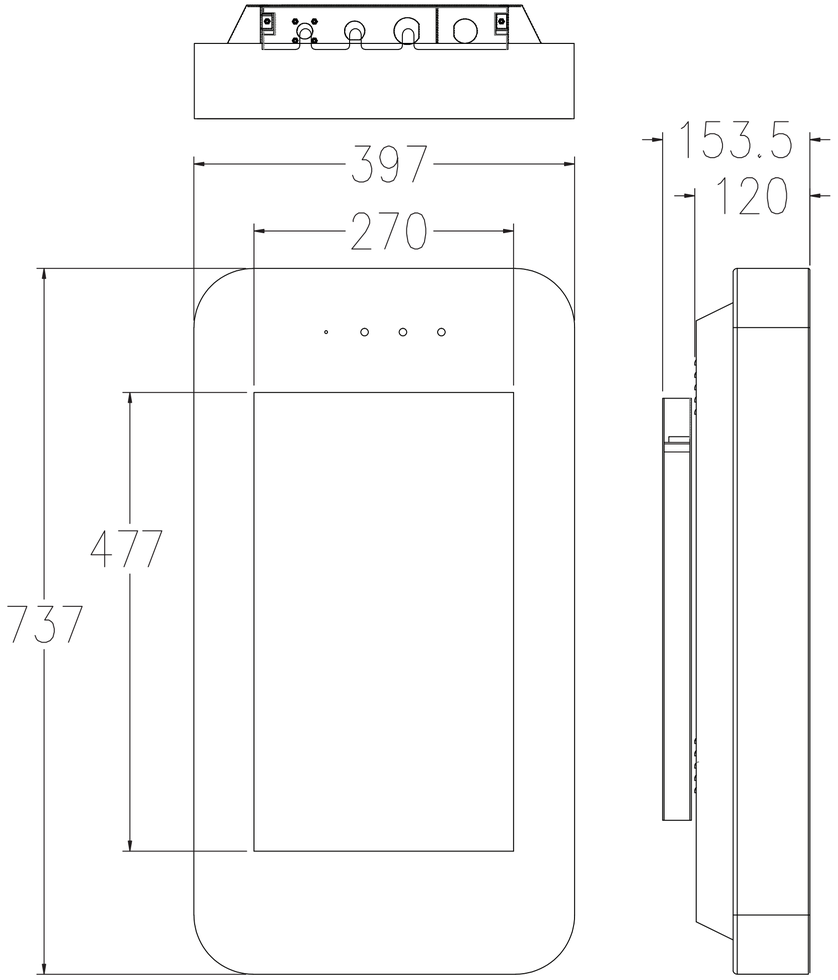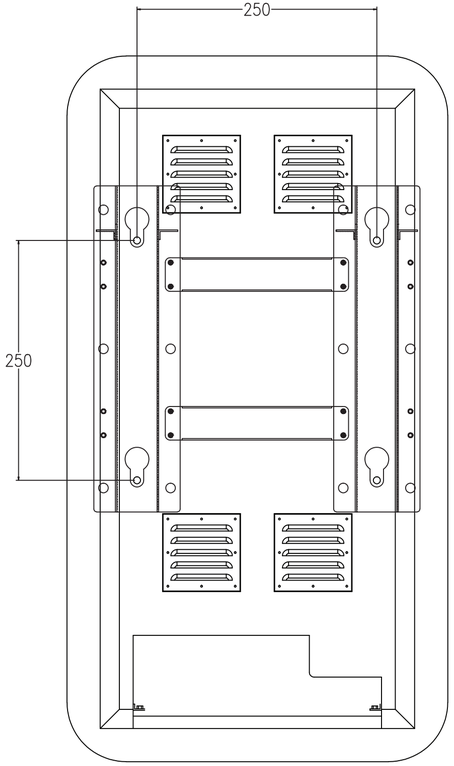Bracket