Bracket

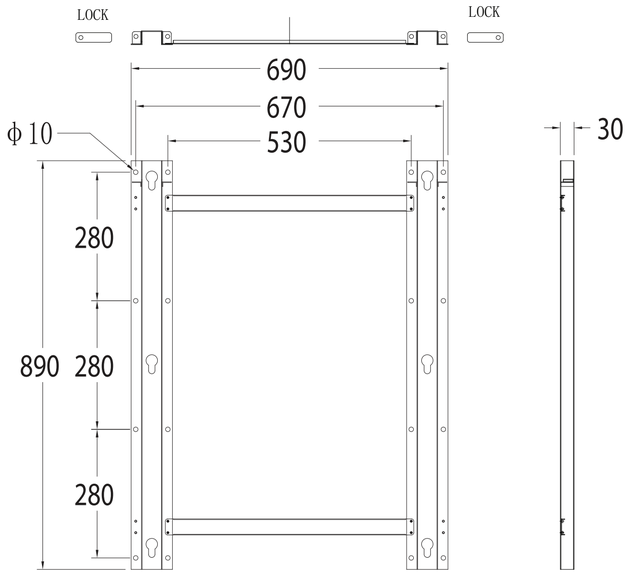
LOCK
LOCK
690
670
530
ϕ10
280
890
280
280
30

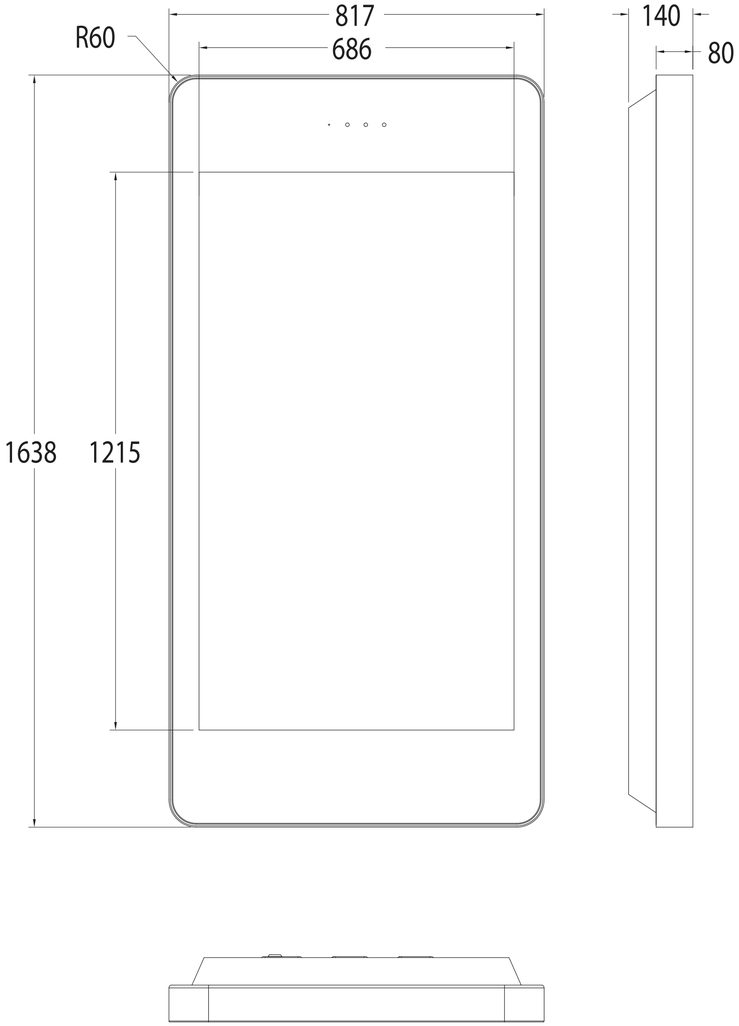
R60
817
686
1638
1215
140
80

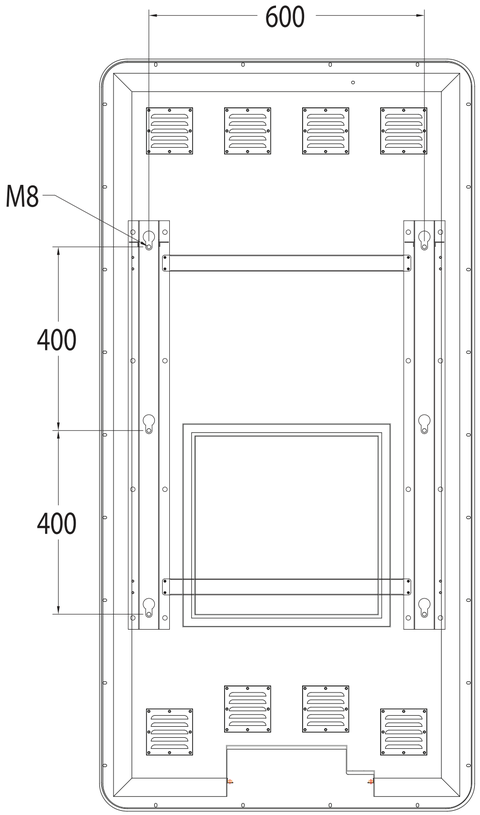
600
M8
400
400